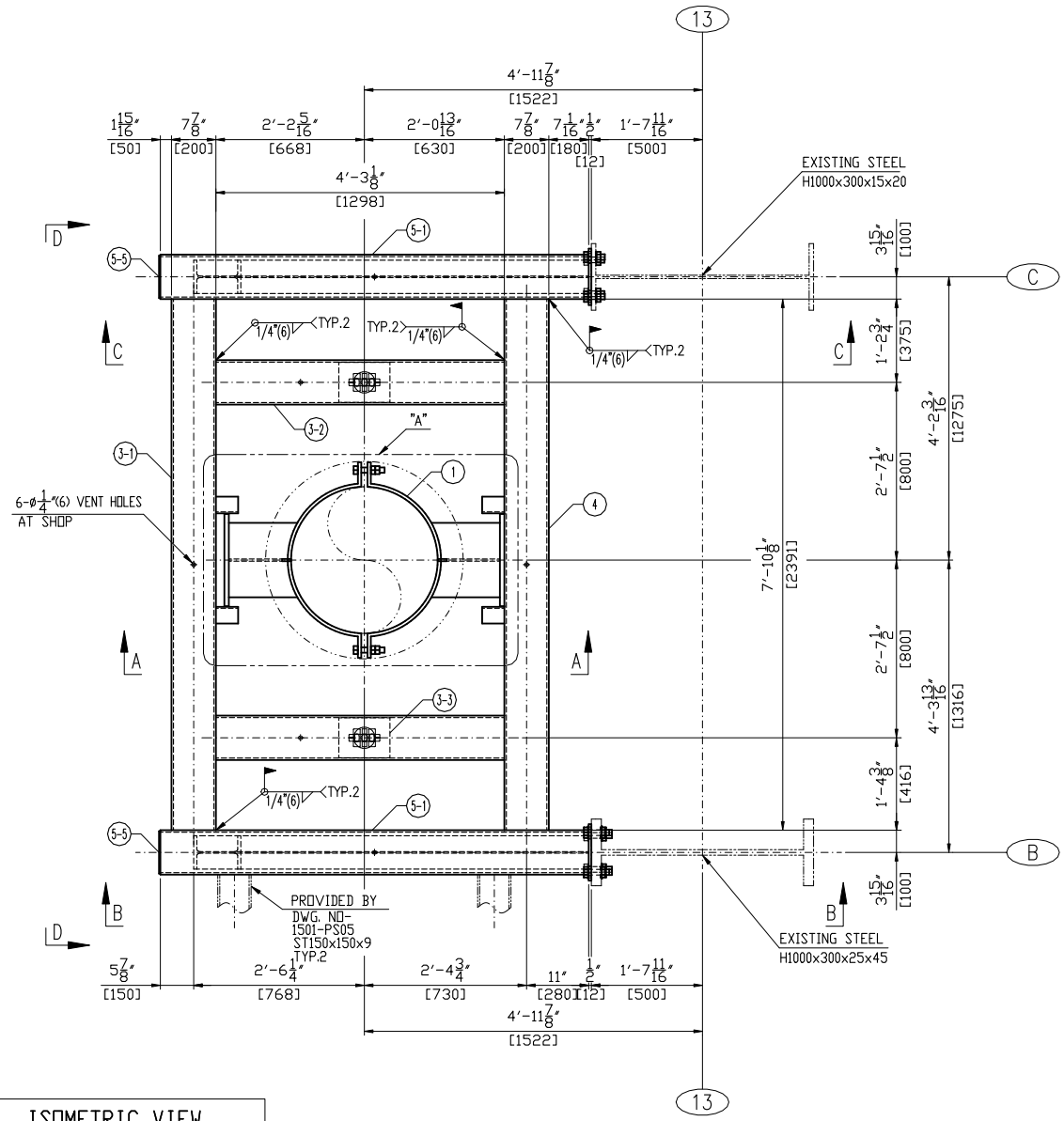

PLAN VIEW

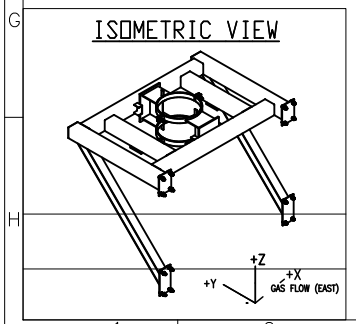

Revision History

Rev	Description	Date	Drawn / Checked By Approved By
–	INITIAL ISSUE	2026-01-21	Drawn J.B.HONG Checked By T.H.KIM Approved By B.L.CHOI

BILL OF MATERIAL — TOTAL WEIGHT : 2502.5 LB — SELECTION NO. 1502 — AREA LEFT

ITEM	DESCRIPTION	TYPE OR SIZE	LENGTH(mm)	LENGTH(IN)	QTY.	MATERIAL	WEIGHT(LB)/UNIT	WEIGHT(LB)/TOTAL	REMARK
1	PIPE CLAMP	PCSDA-650-630			1	A387-22		419.10	NOTE #2
2	CHANNEL	C150x75x6.5x10	100	3.94	4	A36	4.10	16.40	NOTE #3
3-1	SQUARE TUBE(1-I6)	ST200x200x9	2391	94.13	1	A500 Gr.B		275.69	NOTE #3
3-2	SQUARE TUBE(1-I6)	ST200x200x9	1298	51.10	2	A500 Gr.B	149.66	299.32	NOTE #3
3-3	PLATE	PL20x180x230			2	A36	14.33	28.66	NOTE #3
4	SQUARE TUBE(1-I6)	ST200x200x9	2391	94.13	2	A500 Gr.B	275.69	551.38	NOTE #3
5-1	SQUARE TUBE(1-I6)	ST200x200x9	1928	75.91	2	A500 Gr.B	222.30	444.60	NOTE #3
5-2	H-BEAM	H150x150x7x10	2514	98.98	2	A36	174.59	349.18	NOTE #3
5-3	PLATE(4-I27-SLOT33-S)	PL12x254x356			2	A36	18.78	37.56	NOTE #3
5-4	PLATE(4-I27-SLOT33-S)	PL12x229x457			2	A36	21.73	43.46	NOTE #3
5-5	COVER PLATE(4-R14)	PL6x191x191			2	A36	3.79	7.58	NOTE #3
6	H.S.B/N/2PW	1"-8 UNC-3 3/4"			8	A325	1.72	13.76	NOTE #3
7	H.S.B/N/2PW	1"-8 UNC-3"			8	A325	1.63	13.04	NOTE #3
8	LUG PLATE	PL10x40x100			4	A387-91	0.69	2.76	NOTE #4

PIPING INFORMATION

SUPPORT NUMBER	ISO NO. : 1502			PIPE SIZE (IN): 26			PIPE MATERIAL: A335-P91		
	SUPPORT COORDINATES			OPER. TEMP (F) : 1087			INSULATION (IN): 4.5		
				DESIGN LOADS (KIPS)			DESIGN MOVEMENTS (IN)		
	X	Y	Z	X	Y	Z	X	Y	Z
1502-PS04	39'-3 13/16'	23'-11 3/8'	77'-2 3/4'	±1.302	±1.498	-0.376	0.01	1.32	-1.14
	11984	7300	23540						

"Z" UP, "Y" NORTH, "X" GAS FLOW EAST

HANGER SETTING DATA(EACH)		TOTAL TRAVEL	- IN
SPRING LOAD	- KIPS	THERMAL MOVEMENT	- IN
HOT LOAD	- KIPS	SPRING RATE	- LB/IN
COLD LOAD	- KIPS	VARIABILITY	- %

UNIT NO. : 11

NOTES:

1. PIPE SUPPORT SHOP ATTACHMENTS, GENERAL NOTES, WELD & PLATE DETAILS 1635572-D1S0-3800
2. THIS ITEM WILL BE SUPPLIED BY ENGINEERED PIPE SUPPORT SUPPLIER.
3. THIS ITEM WILL BE SUPPLIED BY STEEL SUPPORT FABRICATOR.
4. PIPE ATTACHMENTS THAT ARE SHOP WELDED ONTO THE PIPE ARE SUPPLIED BY THE PIPE FABRICATOR.
5. BILL OF MATERIAL SHOWN ARE FOR ONE (1) SUPPORT, THERE IS ONE (1) SUPPORT PER UNIT
6. REFER TO DRAWING 1635572-D2S0-3801~3804 FOR TYPICAL SHOP WELDED CONNECTION DETAILS NOT SPECIFIED ON THIS DRAWING.
7. FF* : 1 15/16(50)mm FIELD ADJUST
8. THIS ITEM WILL BE SUPPLIED BY CUSTOMER.

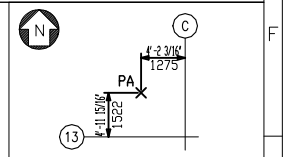

KEY PLAN

Similar To:	Created By:		MLI No.
NONE	SEONGHWA		NONE
First Made For:	Checked By:	Approved By:	IEC61355 No.
1635572	VIMAL.V	Kim, Chunrae	MTC
	Document Type: DETAIL DRAWING		Sheet Size A2
	Document Title: PIPE SUPPORT FOR HRH STEAM OUTLET		
Creation Date 2026-01-21	Drawing No. 1635572-1502-PS04	Revision –	Sheet 1 OF 4

GE VERNOVA

THIRD ANGLE PROJECTION

NLR
Copyright © GE Vernova and/or its affiliates 2026
All rights reserved. The information herein is proprietary information of GE Vernova and/or its affiliates. Thus, it is being provided with the explicit expectation of restricted use. All persons or legal entities receiving this information shall be deemed by the act of its receipt to have contractually agreed to make no duplications, reproductions of any nature by any means, modifications, disclosures, or use use any portion of this material; except as is expressly authorized in writing by GE Vernova and/or its affiliates.

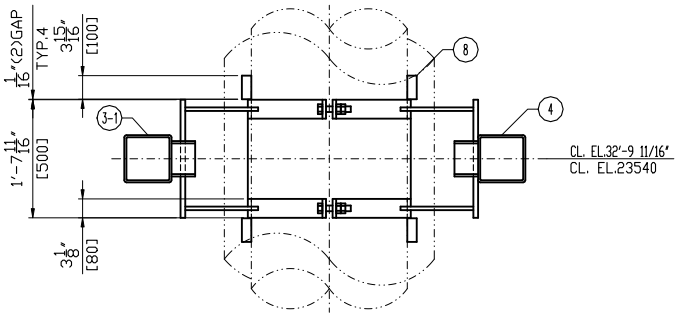

SECTION A-A
LOOKING EAST

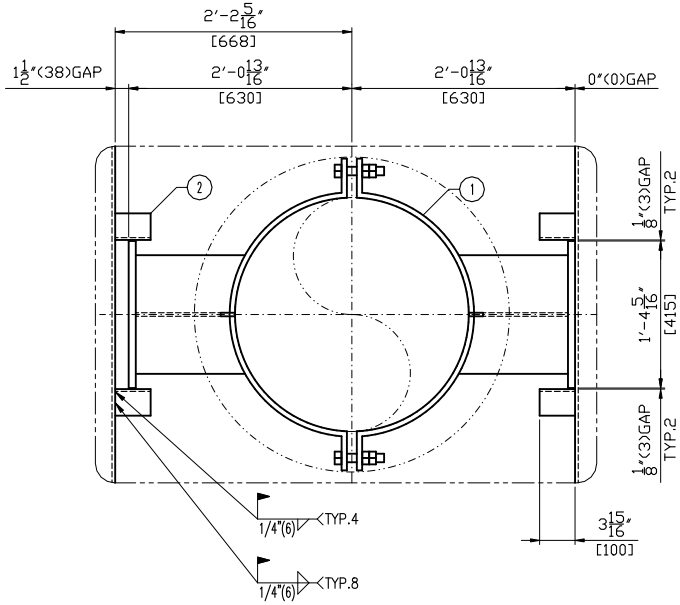

DETAIL "A"

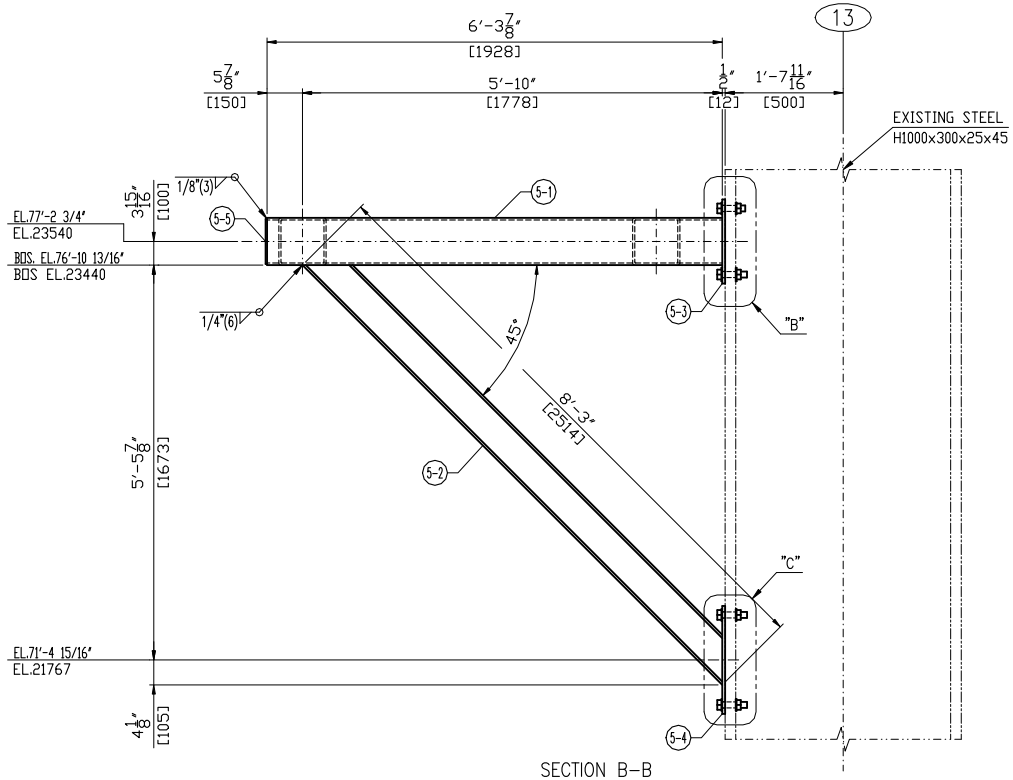

SECTION B-B
LOOKING EAST

NLR

Copyright © GE Vernova and/or its affiliates 2026
All rights reserved. The information herein is proprietary information of GE Vernova and/or its affiliates.

GE VERNOVA	Document Type: DETAIL DRAWING		Sheet Size A2
	Document Title: PIPE SUPPORT FOR HRH STEAM OUTLET		
Creation Date 2026-01-21	Drawing No. 1635572-1502-PS04	Revision –	Sheet 2 OF 4

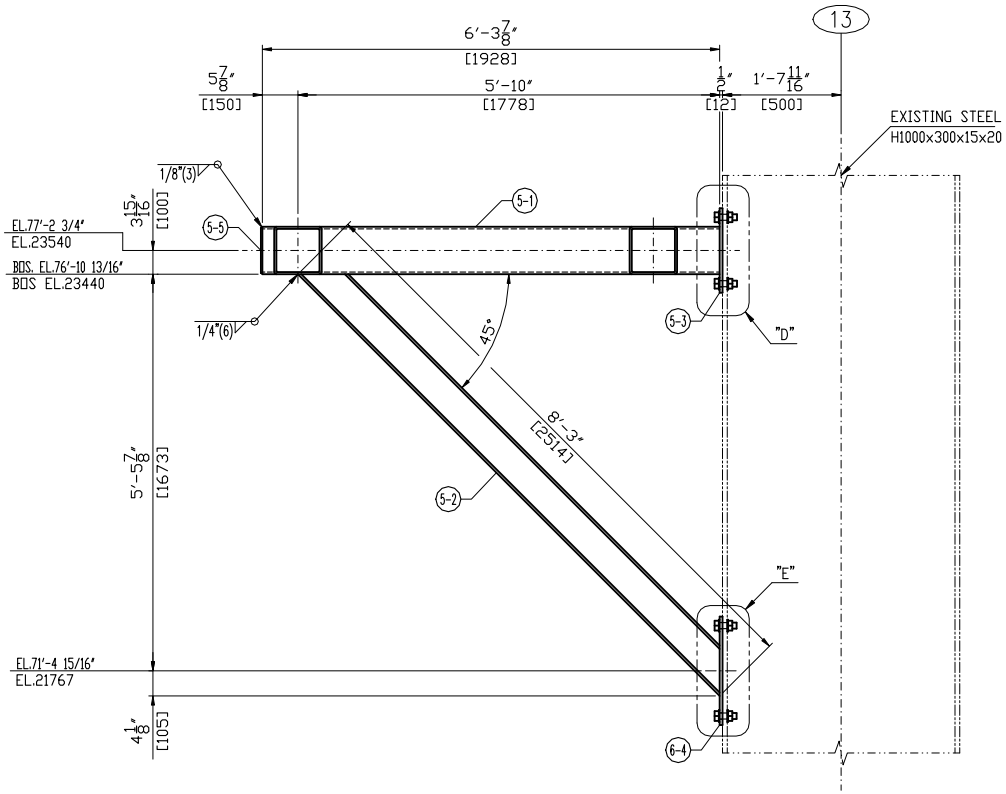

SECTION C-C
LOOKING EAST

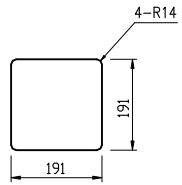

ITEM 5-5

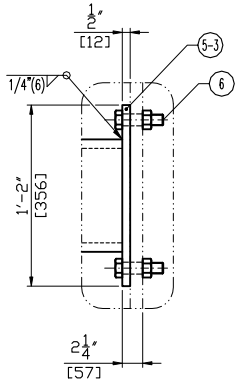

DETAIL "B"

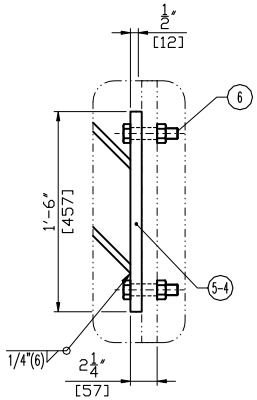

DETAIL "C"

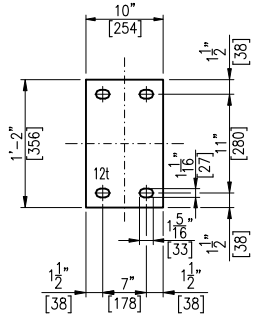

ITEM 5-3

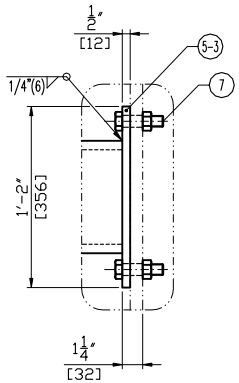

DETAIL "D"

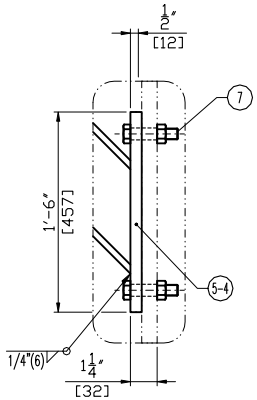

DETAIL "E"

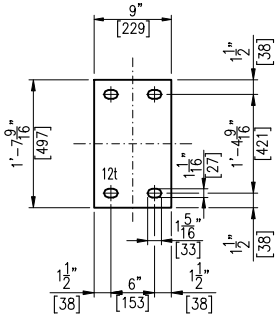

ITEM 5-4

NLR
Copyright© GE Vernova and/or its affiliates 2026
All rights reserved. The information herein is proprietary information of GE Vernova and/or its affiliates.

GE VERNOVA	Document Type: DETAIL DRAWING		Sheet Size A2
	Document Title: PIPE SUPPORT FOR HRH STEAM OUTLET		
Creation Date 2026-01-21	Drawing No. 1635572-1502-PS04	Revision –	Sheet 3 OF 4

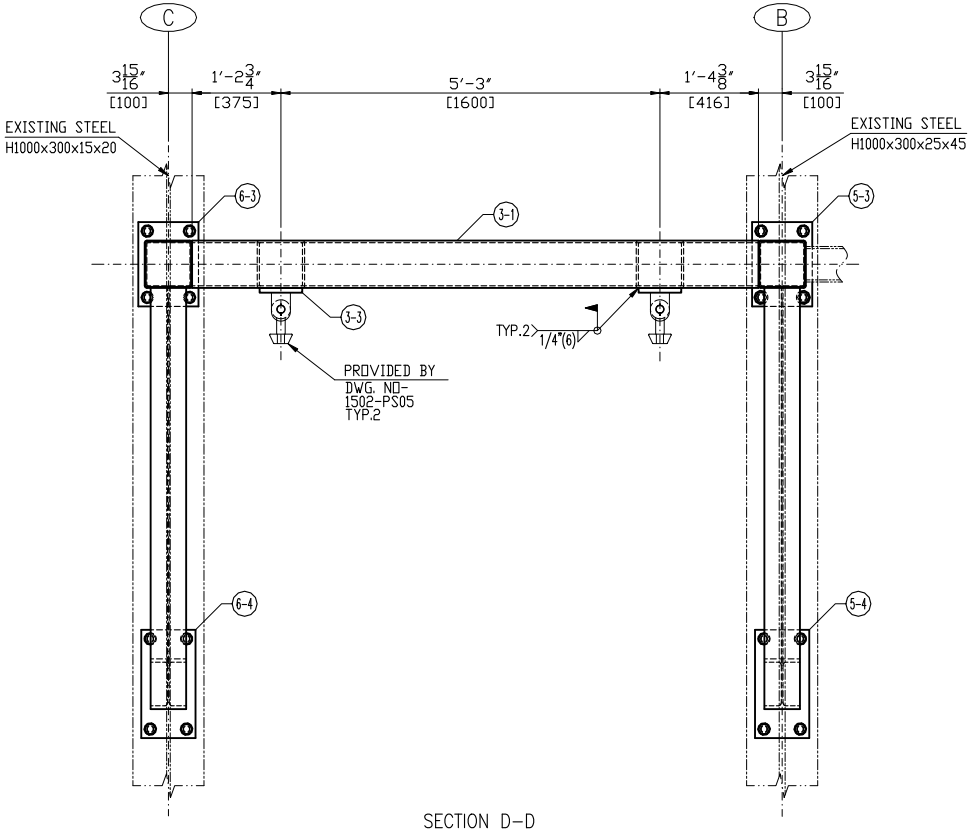

SECTION D-D
LOOKING SOUTH

NLR
Copyright© GE Vernova and/or its affiliates 2026
All rights reserved. The information herein is proprietary information of GE Vernova and/or its affiliates.

GE VERNOVA	Document Type: DETAIL DRAWING		Sheet Size A2
	Document Title: PIPE SUPPORT FOR HRH STEAM OUTLET		
Creation Date 2026-01-21	Drawing No. 1635572-1502-PS04	Revision –	Sheet 4 OF 4